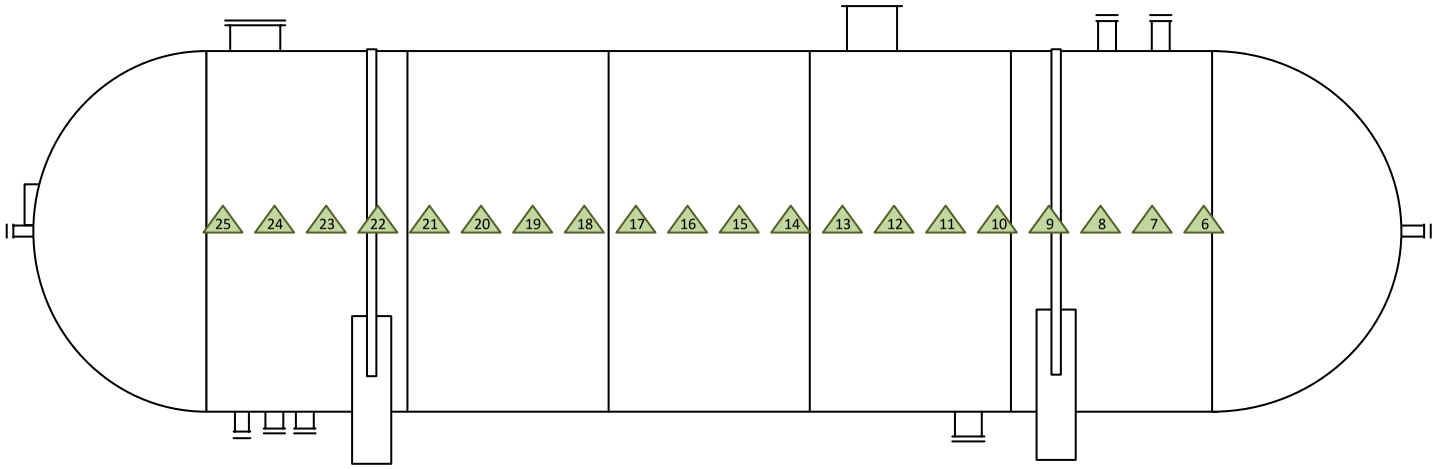

0.795	0.793	0.792	0.793	0.791	0.79	0.791	0.793
0.81	0.812	0.817	0.817	0.819	0.82	0.817	0.82
0.815	0.818	0.822	0.82	0.822	0.822	0.822	0.821
0.815	0.815	0.815	0.818	0.819	0.826	0.822	0.818
0.814	0.812	0.81	0.809	0.809	0.812	0.816	0.812
0.787	0.788	0.787	0.782	0.783	0.788	0.79	0.788
0.79	0.786	0.788	0.784	0.783	0.791	0.791	0.791
0.781	0.788	0.786	0.78	0.78	0.788	0.788	0.783
0.797	0.803	0.805	0.806	0.799	0.797	0.791	0.795
0.804	0.812	0.81	0.811	0.803	0.803	0.799	0.796
0.802	0.811	0.81	0.812	0.801	0.802	0.797	0.801
0.808	0.811	0.813	0.811	0.8	0.8	0.801	0.805
0.793	0.793	0.79	0.791	0.791	0.792	0.795	0.792
0.791	0.792	0.795	0.792	0.791	0.793	0.8	0.796
0.793	0.795	0.796	0.794	0.765	0.793	0.799	0.795
0.784	0.788	0.787	0.788	0.786	0.789	0.786	0.788

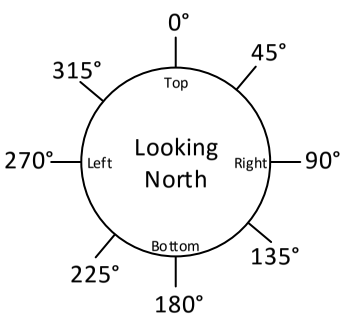

Note:
0° - Top of Vessel
Reading should be taken in clockwise fashion starting at South end

Legend

Condition Monitoring Location (CML)

Instrument Serial No.	R149470	Inspection Date	
		Inspection Type	Thickness Readings
		Company	OILPRO
Flat or Curved	Serial No. 120509309	Technician	J KILLINGSWORTH
Material	Manufacturer OLYMPUS		

SAChem

54-11-002 Methylchloride Storage

Shell Readings

Scale: None

rev 09/08/2016

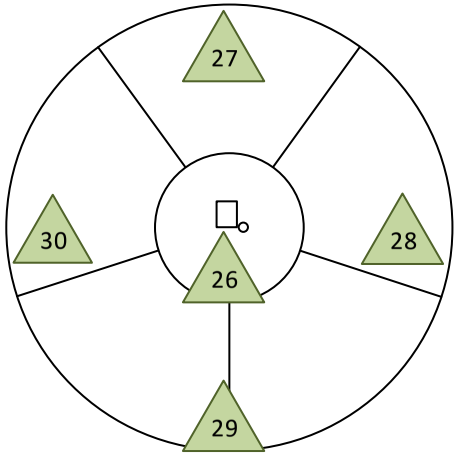

North Head

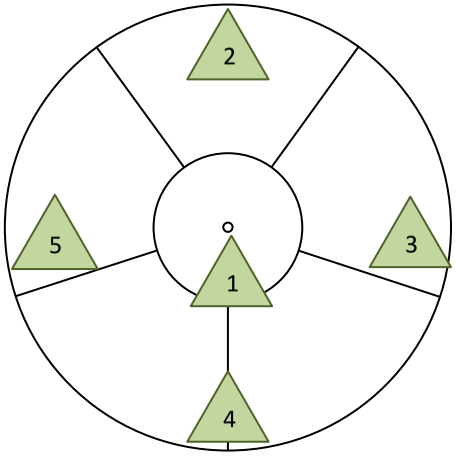

South Head

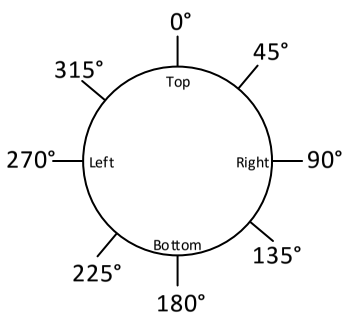

CML	Desc.	Readings Single or 0°
1	South Head Center	0.516
2	South Head 12 O'Clock	0.526
3	South Head 3 O'Clock	0.528
4	South Head 6 O'Clock	0.529
5	South Head 9 O'Clock	0.526
26	North Head Center	0.519
27	North Head 12 O'Clock	0.521
28	North Head 3 O'Clock	0.525
29	North Head 6 O'Clock	0.523
30	North Head 9 O'Clock	0.526

Note:
0° - Top of Vessel
Reading should be taken in clockwise fashion starting at South end

Legend

Condition Monitoring Location (CML)

Instrument Serial No.	R149470	Inspection Date	
		Inspection Type	Thickness Readings
		Company	OILPRO
Flat or Curved	Serial No. 120509309	Technician	J KILLINGSWORTH
Material	Manufacturer OLYMPUS		

SAChem

54-11-002 Methylchloride Storage

Head Readings

Scale: None

rev 09/08/2016

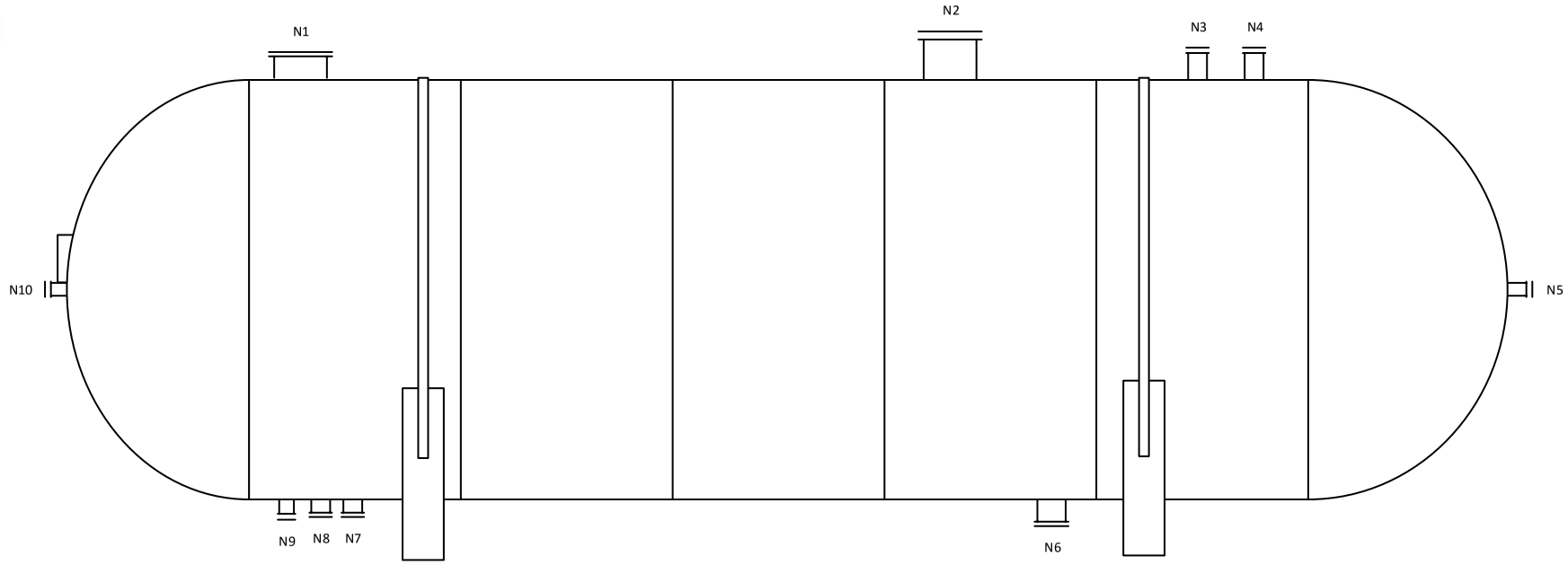

Note:
Readings are taken in a clockwise fashion starting at 0°, north or top of nozzle.

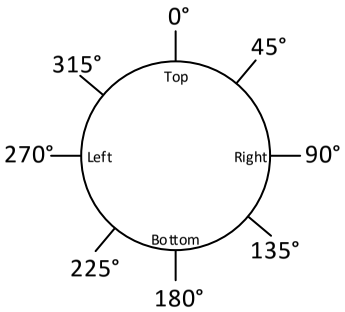

Note:
0° - Top of Vessel
Reading should be taken in clockwise fashion starting at South end

Readings

Noz.	Desc.	Size (in)	tmin*	0° or Single	90°	180°	270°
N1	Manway	16	0.500	0.575	0.578	0.57	0.575
N2	Spare	8	0.500	0.574	0.574	0.575	0.576
N3	In	1	0.179	0.179	0.18	0.18	0.181
N4	In	1	0.179	0.18	0.181	0.179	0.18
N5	Gauge	1	0.179	0.179	0.179	0.181	0.18
N6	Out	3	0.300	0.317	0.312	0.312	0.314
N7		2	0.216	0.285	0.289	0.29	0.287
N8		3	0.300	0.31	0.308	0.317	0.308
N9	Sight Guage	3	0.300	0.814	0.822	0.818	0.82
N10	Thermowell	1	0.154	0.168	0.17	0.171	0.168

** Based on current ASME standards (sch 80)*

Legend

Condition Monitoring Location (CML)

Instrument Serial No.	R149470	Inspection Date	
		Inspection Type	Thickness Readings
		Company	OILPRO
Flat or Curved	Serial No. 120509309	Technician	J KILLINGSWORTH
Material	Manufacturer OLYMPUS		

SAChem

54-11-002 Methylchloride Storage

Nozzle Readings

Scale: None

rev 09/08/2016